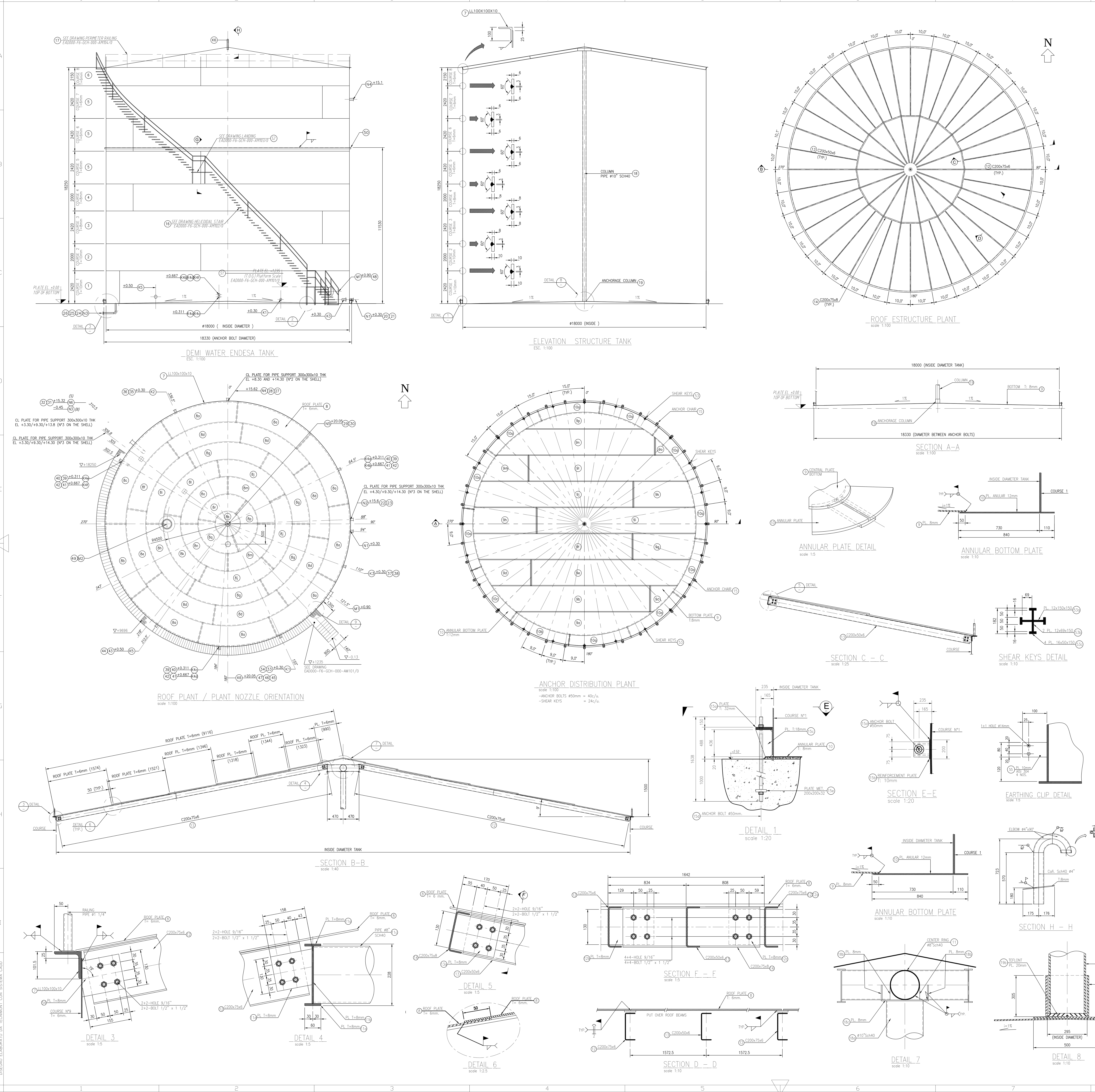

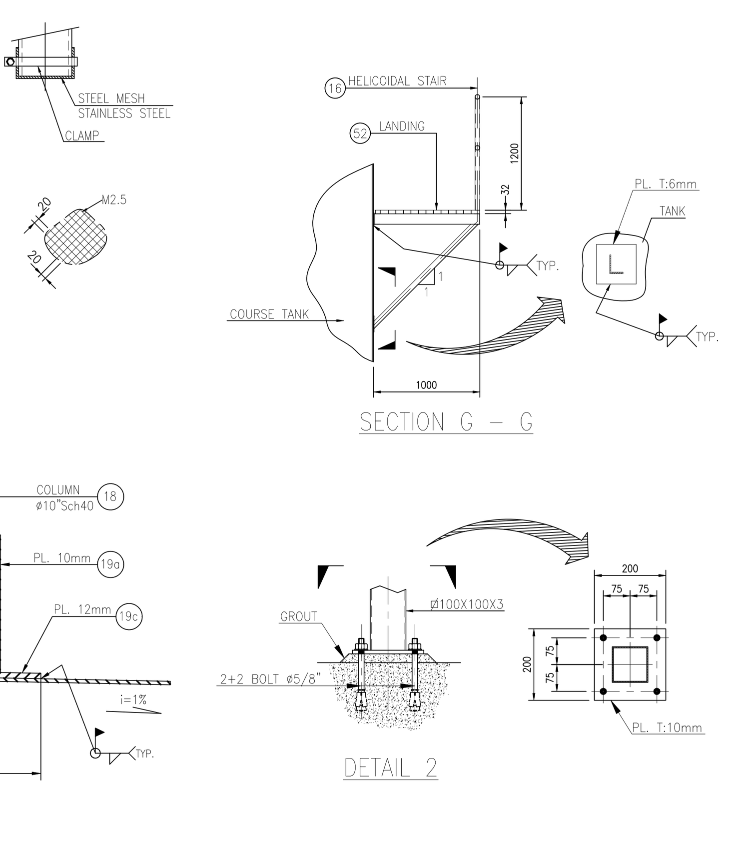

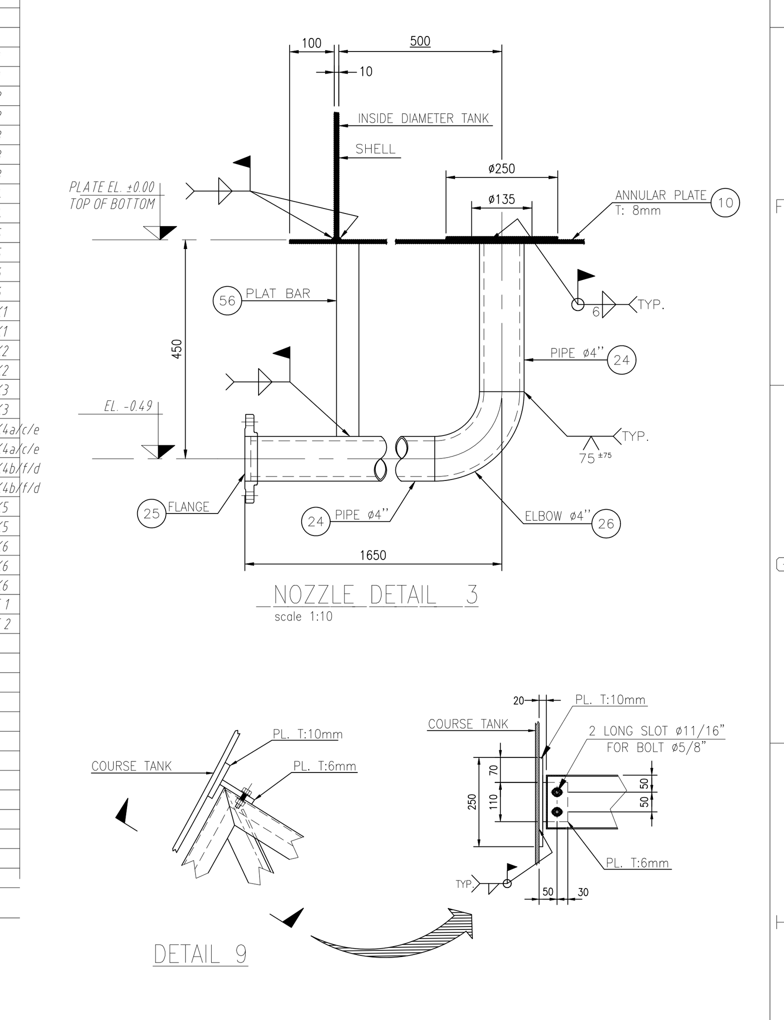

MATERIAL LIST

POSITION	DESCRIPTION	Nº PIECES	MATERIAL	WT. KG.	SYMBOL	DIMENSIONS	NOTES
1	PLATE	1	ASTM-A36	10742.80		PL 2420x56550x10mm	
2	PLATE	1	ASTM-A36	8878.35		PL 2000x56550x10mm	
3	PLATE	1	ASTM-A36	8594.24		PL 2420x56550x8mm	
4	PLATE	1	ASTM-A36	7102.68		PL 2000x56550x8mm	
5	PLATE	3	ASTM-A36	19337.05		PL 2420x56550x6mm	
6	PLATE	1	ASTM-A36	5726.54		PL 2150x56550x6mm	
7	ANGLE	1	ASTM-A36	887.83		LL 100x100x10x56550mm	
8	ROOF PLATE	36		12669.19			
8a	PLATE	7	ASTM-A36	2885.61		PL 5890x1980x6mm	
8b	PLATE	1	ASTM-A36	418.52		PL 5892x1980x6mm	
8c	PLATE	1	ASTM-A36	585.10		PL 4282x1785x6mm	
8d	PLATE	6	ASTM-A36	2327.10		PL 5777x1980x6mm	
8e	PLATE	1	ASTM-A36	393.93		PL 5778x1980x6mm	
8f	PLATE	1	ASTM-A36	362.99		PL 5506x1980x6mm	
8g	PLATE	4	ASTM-A36	1455.84		PL 6078x1980x6mm	
8h	PLATE	1	ASTM-A36	369.40		PL 6080x1980x6mm	
8i	PLATE	1	ASTM-A36	345.48		PL 5873x1934x6mm	
8j	PLATE	3	ASTM-A36	980.46		PL 6078x1980x6mm	
8k	PLATE	1	ASTM-A36	332.09		PL 5624x1980x6mm	
8l	PLATE	1	ASTM-A36	311.74		PL 5472x1941x6mm	
8m	PLATE	2	ASTM-A36	575.74		PL 4972x1979x6mm	
8n	PLATE	1	ASTM-A36	293.25		PL 4973x1980x6mm	
8o	PLATE	1	ASTM-A36	275.67		PL 4876x1950x6mm	
8p	PLATE	1	ASTM-A36	209.04		PL 3852x1773x6mm	
8q	PLATE	1	ASTM-A36	214.24		PL 3852x1773x6mm	
8r	PLATE	1	ASTM-A36	200.04		PL 3807x1758x6mm	
8s	PLATE	1	ASTM-A36	132.95		ø1980 x 6mm	
9	BOTTOM PLATE	16		14092.95			
9a	PLATE	1	ASTM-A36	830.21		PL 10462x1850x8mm	
9b	PLATE	1	ASTM-A36	1401.60		PL 11825x1980x8mm	
9c	PLATE	1	ASTM-A36	163.14		PL 2116x1980x8mm	
9d	PLATE	1	ASTM-A36	438.65		PL 3954x1980x8mm	
9e	PLATE	1	ASTM-A36	1428.97		PL 11843x1980x8mm	
9f	PLATE	1	ASTM-A36	1462.56		PL 11850x1980x8mm	
9g	PLATE	1	ASTM-A36	568.17		PL 4732x1980x8mm	
9h	PLATE	1	ASTM-A36	592.28		PL 4787x1980x8mm	
9i	PLATE	1	ASTM-A36	1479.85		PL 11850x1980x8mm	
9j	PLATE	1	ASTM-A36	1454.25		PL 11850x1980x8mm	
9k	PLATE	1	ASTM-A36	545.38		PL 4614x1980x8mm	
9l	PLATE	1	ASTM-A36	381.00		PL 3575x1980x8mm	
9m	PLATE	1	ASTM-A36	1418.05		PL 11840x1980x8mm	
9n	PLATE	1	ASTM-A36	1350.68		PL 11817x1980x8mm	
9o	PLATE	1	ASTM-A36	67.00		PL 1422x1389x8mm	
9p	PLATE	1	ASTM-A36	511.16		PL 9025x1330x8mm	
10	ANULAR PLATE	12		4357.32			
10a	PLATE	10	ASTM-A36	3631.10		PL 4705x1121x12mm	
10b	PLATE	1	ASTM-A36	367.07		PL 4705x1121x12mm	
10c	PLATE	1	ASTM-A36	359.15		PL 4705x1121x12mm	
11	CENTER RING	1		164.05			
11a	PLATE	2	ASTM-A36	22.26		ø1000 x 8mm	
11b	PLATE	1	ASTM-A36	39.33		PL 2954x212x8mm	
11c	PIPE	2	ASTM-A53	79.24		CAÑ. ø8" SCH40	
11d	PLATE	18	ASTM-A36	23.22		PL 158x130x8mm	
12	CANAL	18		2447.46			
12a	CANAL	18	ASTM-A36	2397.78		C200x75x6mm	
12b	PLATE	18	ASTM-A36	30.06		PL 204x130x8mm	
12c	PLATE	18	ASTM-A36	19.62		PL 134x130x8mm	
13	CANAL	18	ASTM-A36	1018.98		C200x50x6mm	
13a	PLATE	18	ASTM-A36	23.81		PL 162X130X8mm	
14	CANAL	18	ASTM-A36	592.38		C200x75x8mm	
15	ANCHOR CHAIR	40		2801.95			
15a	PLATE	40	ASTM-A36	324.00		PL 215x150x32mm	
15b	PLATE	40	ASTM-A36	280.80		PL 447x200x10mm	
15c	PLATE	40	ASTM-A36	738.40		PL 430x215x18mm	
15d	ANCHOR	40	SAE-1045	1056.84		Feø50, L: 1638mm	
15e	PLATE	40	ASTM-A36	401.92		PL 200x200x32mm	
16	HELICOIDAL STAIR	1	ASTM-A36	2754.08		EAD000-F6-GCH-000-AM102/0	
17	PERIMETER RAILING	1	ASTM-A53	934.49		EAD000-F6-GCH-000-AM104/0	
18	COLUMN	1		1145.95			
18a	PIPE	1	ASTM-A53	1128.63		CAÑ. ø10" SCH40, L: 18720	
18b	PLATE	8	ASTM-A36	1.28		PL 90x70x8mm	
18c	PLATE	1	ASTM-A36	16.04		ø350 x 8mm	
19	ANCHORAGE COLUMN	1		51.79			
19a	PLATE	1	ASTM-A36	22.56		PL 958x300x10mm	
19b	TEFLON	1	ASTM-A36	10.73		ø295 x 20mm	
19c	PLATE	1	ASTM-A36	18.50		ø500 x 12mm	
20	PIPE	1	SA106 Gr. B	8.51		CAÑ. ø8" SCH80	NOZZLE 1
21	FLANGE	1	SA105	14.1		FLANGE 8"#150 S.O.-RF	NOZZLE 1
22	PIPE	1	SA106 Gr. B	1.6		CAÑ. ø2" SCH80	NOZZLE 2
23	FLANGE	1	SA105	2.7		FLANGE 2"#150 W.N.-RF	NOZZLE 2
24	PIPE	1	SA106 Gr. B	20.45		CAÑ. ø4" SCH80	NOZZLE 3
25	FLANGE	1	SA105	5.9		FLANGE 4"#150 S.O.-RF	NOZZLE 3
26	ELBOW	1	SA234 Gr. WPB	3.84		ELBOW ø 4" x 90°	NOZZLE 3
27	FLANGE	1	SA105	5.9		FLANGE 4"#150 S.O.-RF	NOZZLE 4
28	PIPE	1	SA106 Gr. B	11.97		CAÑ. ø4" SCH80	NOZZLE 4
29	FLANGE	1	SA105	5.9		FLANGE 4"#150 S.O.-RF	NOZZLE 5
30	PIPE	1	SA106 Gr. B	11.97		CAÑ. ø4" SCH80	NOZZLE 5
31	PIPE	1	SA106 Gr. B	21.94		CAÑ. ø6" SCH80	NOZZLE 6
32	FLANGE	1	SA105	8.1		FLANGE 6"#150 S.O.-RF	NOZZLE 6
33	PIPE	1	SA106 Gr. B	11.97		CAÑ. ø4" SCH80	NOZZLE K1
34	FLANGE	1	SA105	5.9		FLANGE 4"#150 S.O.-RF	NOZZLE K1
35	PIPE	1	SA106 Gr. B	11.97		CAÑ. ø4" SCH80	NOZZLE K2
36	FLANGE	1	SA105	5.9		FLANGE 4"#150 S.O.-RF	NOZZLE K2
37	PIPE	1	SA106 Gr. B	0.62		CAÑ. ø1" SCH160	NOZZLE K3
38	FLANGE	1	SA105	1.10		FLANGE 1"#300 W.N.-RF	NOZZLE K3
39	PIPE	1	SA106 Gr. B	0.62		CAÑ. ø1" SCH160	NOZZLE K4a/c/e
40	FLANGE	1	SA105	1.10		FLANGE 1"#300 W.N.-RF	NOZZLE K4a/c/e
41	PIPE	1	SA106 Gr. B	0.62		CAÑ. ø1" SCH160	NOZZLE K4b/f/d
42	FLANGE	1	SA105	1.10		FLANGE 1"#300 W.N.-RF	NOZZLE K4b/f/d
43	PIPE	1	SA106 Gr. B	1.03		CAÑ. ø1 1/2" SCH80	NOZZLE K5
44	FLANGE	1	SA105	1.10		FLANGE 1 1/2"#300W.N.-RF	NOZZLE K5
45	PIPE	1	SA106 Gr. B	20.45		CAÑ. ø4" SCH80	NOZZLE K6
46	FLANGE	1	SA105	5.9		FLANGE 4"#150 S.O.-RF	NOZZLE K6
47	ELBOW	1	SA234 Gr. WPB	3.84		ELBOW ø 4" x 90°	NOZZLE K6
48	MANHOLE	1	ASTM-A36	224.77		AS SHOWN	MANHOLE 1
49	MANHOLE	1	ASTM-A36	60.38		AS SHOWN	MANHOLE 2
50	ANGLE	1	ASTM-A36	765.48		LL 100x100x8x56550mm	
51	PLATFORM SCALE	1	ASTM-A36	1194.21		EAD000-F6-GCH-000-AM101/0	
52	LANDING	1	ASTM-A36	110.40		EAD000-F6-GCH-000-AM103/0	
53	SHEAR KEYS	24		188.10			
53a	PLATE	24	ASTM-A36	50.87		PL 150x150x12mm	
53b	PLATE	48	ASTM-A36	46.80		PL 150x69x12mm	
53c	PLATE	96	ASTM-A36	90.43		PL 150x50x16mm	
54	PLATE	36	ASTM-A36	47.61		PL 162x130x8mm	
55	PLATE	1	ASTM-A36	0.63		PL 100x80x10mm	
56	PLATE	1	ASTM-A36	1.24		PL 395x50x8mm	
TOTAL WEIGHT:	107112.81 Kg						

MAIN DIMENSIONS

NOMINAL VOLUME (m^3)	4031
INTERNAL DIAMETER (D) (mm)	18000
HEIGHT WALL (H) (mm)	18250
WIDTH (mm)	-
LENGTH (mm)	-

ITEM #		TICKNESS
1	COURSE 1	10
2	COURSE 2	10
3	COURSE 3	8
4	COURSE 4	8
5	COURSE 5	6
6	COURSE 6	6
7	COURSE 7	6
8	COURSE 8	6
9	TOP RING L100x10	L100x100x10
10	BOTTOM RING	12
11	BOTTOM	8
12	CONIC ROOF AUTOSUPPORTED	6

DESIGN CONDITIONS

SEISMIC ZONING	3 CHILEAN CODE
FLUID	DESMINERALISED WATER
DENSITY (Kg/m^3)	1000
BODIED (%)	--------
PH VALUE	6 - 8.5
OPERATION HEAT °C	25
DESIGN HEAT °C	50
WORK PRESURE (BAR)	ATMOSPHERIC
DESIGN PRESSURE (BAR)	ATMOSPHERIC
DESIGN REPORT	YES

NOZZLES LIST FOR DEM WATER TANK

NOZZLE	SIZE ø	FLANGE TYPE	RATING	ELEVATION (mm)	PROJECTION (mm)	SERVICE
N1	8"	S.O. - RF	150#	S 300	9250	OUTLET (PUMP SUCTION)
N2	2"	W.N. - RF	150#	S 15620	9250	PUMPS RECYCLE
N3	4"	S.O. - RF	150#	B (-450)	10150	DRAIN
N4	4"	S.O. - RF	150#	S 15620	9200	DEMI WATER INLET
N5	4"	S.O. - RF	150#	R 20050		FROM CO2 ABSORBER SYSTEM
N6	6"	S.O. - RF	150#	S 15320	9250	OVERFLOW
K1	4"	S.O. - RF	150#	S 300	9200	LIC
K2	4"	S.O. - RF	150#	S 300	9200	LIC
K3	1"	W.N. - RF	300#	S 300	9200	LI CONNECTION
K4a/c/e	1"	W.N. - RF	300#	S 311	9200	LSAZ CONNECTION
K4b/f/d	1"	W.N. - RF	300#	S 667	9200	LSAZ CONNECTION
K5	1 1/2"	W.N. - RF	300#	S 500	9200	TI
K6	4"	S.O. - RF	150#	R 20050		VENT
M1	24"		AP1 650	S 900	9300	MANHOLE
M2	24"		AP1 650	R 19400		MANHOLE

S= SHELL R= ROOF B= BOTTOM

ASSEMBLY		TESTING	
DESIGN STANDAR	API ADD 2007-NCH 2369-2003	MEASURE	SI (REF. API 650)
TANK MATERIAL	A36	RADIOGRAPHY INSPECTION	SI (REF. API 650)
FLANGES GRADE	ASME B16.5	INK BORE	SI (REF. API 650)
CORROSION OVERTICKNESS (mm)	1.2 mm	HIDRAULICS TEST	SI (REF. API 650)
SUPERIOR RAILING OF TKS	SI	EMPTY FLOOR	
REVESTIMIENTO INTERIOR	NO		
SERVICE STAIR	SI		

ANCHOR		SURFACE TREATMENT	
ANCHOR QUANTITY	40	IN ACCORDANCE TO TECHNICAL ESPECIFICATION	
BOLT DIAMETER	ø50mm		
QUANTITY OF SHEAR CHAIR	24		
BOLTS DIAMETER CIRCLE	18330 mm	ENVIRONMENT TYPE	

FOUNDATION LOADING DATA

DEAD LOAD PER UNIT LENGTH	D_L	13.01 KN-m
LIVE LOAD PER UNIT LENGTH	L_L	4.41 KN/m
UNIFORM LOADING, OPERATING CONDITION	W_o	190.09 KN/m²
UNIFORM LOADING, HIDROSTATIC TEST CONDITION	W_h	190.09 KN/m²
BASE SHEAR DUE TO WIND LOAD	F_w	239.94 KN
MOMENT DUE TO WIND LOAD	M_w	1859.54 KN-m
BASE SHEAR DUE TO SEISMIC LOAD	F_s	8152.81 KN
MOMENT DUE TO SEISMIC LOAD	M_s	55981.48 KN-m

DIA OF TANK, H, Fw, Fs, (LL, DL), Wo, Wh

LOADS AT BASE		OPERATING	HYDROTEST	EARTHQUAKE
VERTICAL LOAD	KN	41866.66	41866.66	41866.66
SHEAR	KN			8152.81
MOMENT	KN-M			55981.48
SUPPLY WEIGHT (MASS)	75,42 Tons			
WEIGHT FULL WATER	4015,42 Tons			

GENERAL NOTES

- FOR MANHOLE SHELL DETAIL SEE DRAWING 04-0022-ST-01
- FOR MANHOLE ROOF DETAIL SEE DRAWING 04-0022-ST-02
- FOR RAILING DETAIL SEE DRAWING 04-0022-ST-04
- FOR NOZZLE DETAIL SEE DRAWING 04-0022-ST-05
- FOR LADDER DETAIL SEE DRAWING 04-0022-ST-06

REV.	REVISION DESCRIPTION AND REFERENCE	ISSUE CAT.	DATE
09			
08			
07			
06			
04			
03	AS BUILT	S.C.V.	23/10/2010
02	ISSUD FOR CONSTRUCTION	S.C.V.	15/06/2009
01	REVISION	S.C.V.	DIC. 2008
00	FOR APPROVAL	S.C.V.	NOV. 2008

	DATE	UNIT	INITIAL/NAME	SIGNATURE
PREPARED				
CHECKED				
AUTHORIZED				

REPLACES DOCUMENT: [FILE DOCUMENT: EAA001_AA_000_000_000000_00A.DWG]
MEASURE UNIT: mm SCALE: 1:SCALA PLOT SCALE: 1:1

endesa chile
Tecnimont
SLOVENSKÉ ENERGETICKÉ STROJÁRNE a.s. TLMAČE

ENDESA CHILE
ACB - 003.06
BOCAMINA II PROJECT

DEMI WATER TANK
GA AND DETAIL DRAWING
ITEM NO: .20GCH10-BB001

DWG IDENTIFIC. NUMBER:	EAD000-F3-GCH-000-AM0101				REV. 3	SHEET 1	OF 1
	WORK id	SERIES	KKS id	KEY PLAN / PROGRESSIVE NUMB.	REV.	SHEET	OF

DISEGNO ELABORATO DA TECNIMONT CON SISTEMA CADD