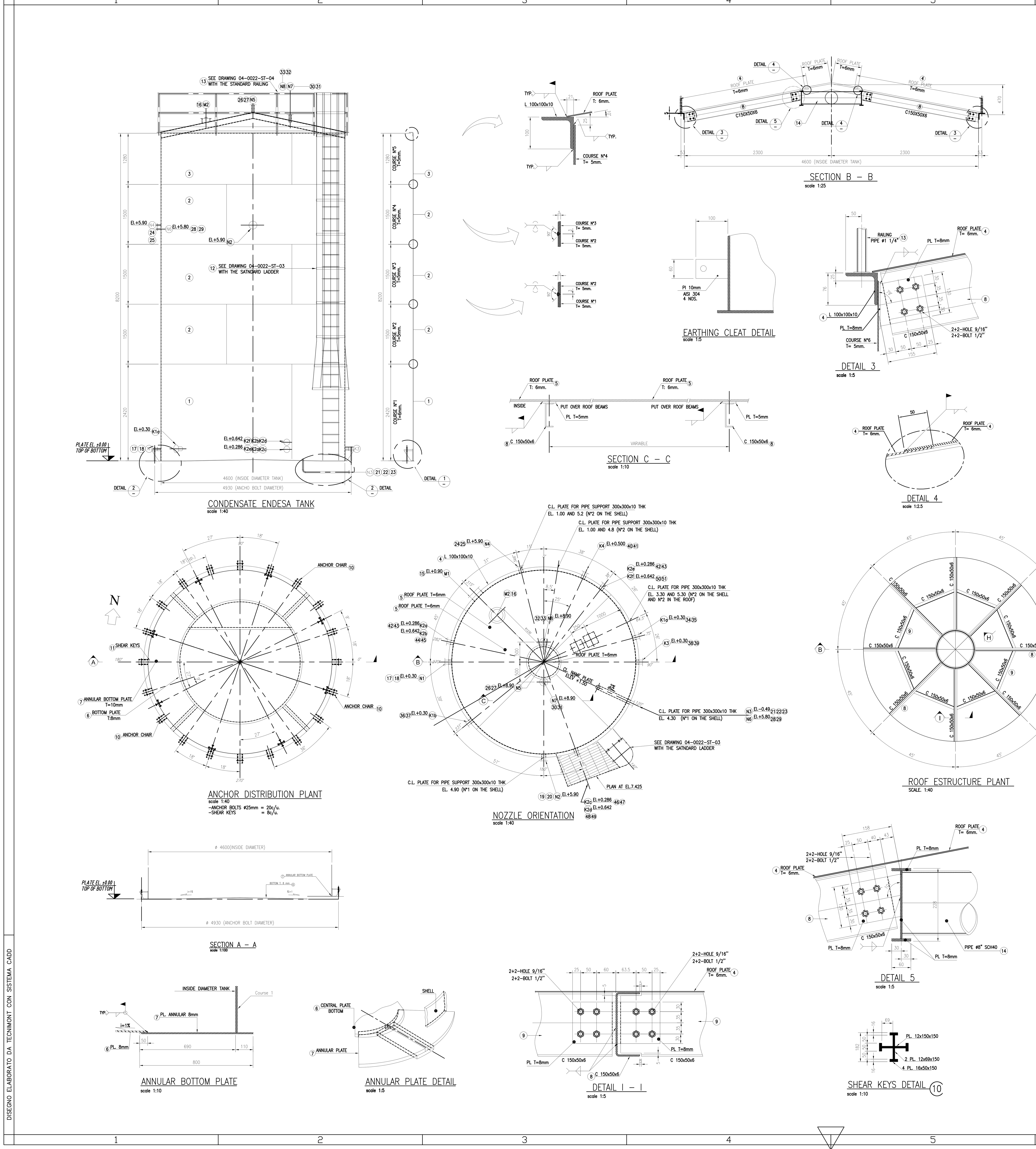

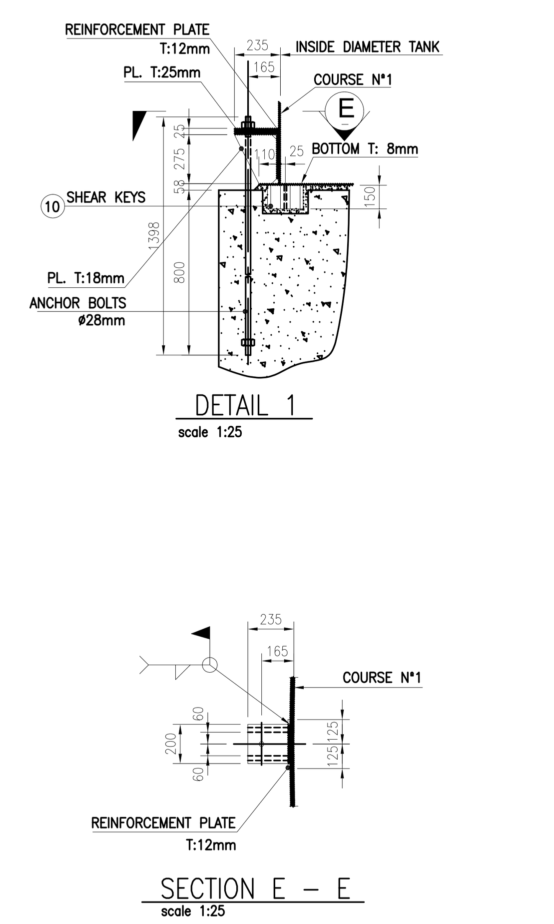

DISEGNO ELABORATO DA TECNIMONT CON SISTEMA CADD

MATERIAL LIST

POSITION	DESCRIPTION	Nº PIECES	MATERIAL	WT. KG.	SYMBOL	DIMENSIONS	NOTES
1	PLATE	1	ASTM-A36	1373.86		PL 2420x14464x5mm	
2	PLATE	3	ASTM-A36	2248.14		PL 1500x14464x5mm	
3	PLATE	1	ASTM-A36	1033.24		PL 1280x14464x5mm	
4	ANGLE	1	ASTM-A36	221.89		LL 100x100x10x14.793mm	
5	ROOF PLATE	1	ASTM-A36	768.09		AS SHOWN	
6	BOTTOM PLATE	1	ASTM-A36	768.09		AS SHOWN	
7	ANULAR PLATE	1	ASTM-A36	763.54		AS SHOWN	
8	CANAL	8	ASTM-A36	119.20		AS SHOWN	
9	CANAL	8	ASTM-A36	106.88		AS SHOWN	
10	ANCHOR CHAIR	20	ASTM-A36	459.60		AS SHOWN	
11	SHEAR CHAIR	8	ASTM-A36	62.70		AS SHOWN	
12	LADDER	1	ASTM-A36	286.32		AS SHOWN	
13	RAILING	1	ASTM-A53	463.37		AS SHOWN	
14	CENTER RING	1	ASTM-A53	164.77		AS SHOWN	
15	MANHOLE	1	ASTM-A36	224.77		AS SHOWN	M 1
16	MANHOLE	1	ASTM-A36	60.38		AS SHOWN	M 2
17	PIPE	1	SA106 Gr. B	14.69		CAÑ. Ø6" SCH80	NOZZLE 1
18	FLANGE	1	SA105	8.10		FLANGE 6"#150 S.O - RF	NOZZLE 1
19	PIPE	1	SA106 Gr. B	14.69		CAÑ. Ø6" SCH80	NOZZLE 2
20	FLANGE	1	SA105	8.10		FLANGE 6"#150 S.O - RF	NOZZLE 2
21	PIPE	1	SA106 Gr. B	25.14		CAÑ. Ø4" SCH80	NOZZLE 3
22	ELBOW	1	SA234 Gr. WPB	3.84		ELBOW 4" x 90°	NOZZLE 3
23	FLANGE	1	SA105	5.90		FLANGE 4"#150 S.O - RF	NOZZLE 3
24	PIPE	1	SA106 Gr. B	10.71		CAÑ. Ø4" SCH80	NOZZLE 4
25	FLANGE	1	SA105	5.90		FLANGE 4"#150 S.O - RF	NOZZLE 4
26	PIPE	1	SA106 Gr. B	10.71		CAÑ. Ø4" SCH80	NOZZLE 5
27	FLANGE	1	SA105	5.90		FLANGE 4"#150 S.O - RF	NOZZLE 5
28	PIPE	1	SA106 Gr. B	10.71		CAÑ. Ø4" SCH80	NOZZLE 6
29	FLANGE	1	SA105	5.90		FLANGE 4"#150 S.O - RF	NOZZLE 6
30	PIPE	1	SA106 Gr. B	10.71		CAÑ. Ø4" SCH80	NOZZLE 7
31	FLANGE	1	SA105	5.90		FLANGE 4"#150 S.O - RF	NOZZLE 7
32	PIPE	1	SA106 Gr. B	10.71		CAÑ. Ø4" SCH80	NOZZLE 8
33	FLANGE	1	SA105	5.90		FLANGE 4"#150 S.O - RF	NOZZLE 8
34	PIPE	1	SA106 Gr. B	10.71		CAÑ. Ø4" SCH80	LIC (K1)
35	FLANGE	1	SA105	5.90		FLANGE 4"#150 S.O - RF	LIC (K1)
36	PIPE	1	SA106 Gr. B	10.71		CAÑ. Ø4" SCH80	LIC (K2)
37	FLANGE	1	SA105	5.90		FLANGE 4"#150 S.O - RF	LIC (K2)
38	PIPE	1	SA106 Gr. B	10.71		CAÑ. Ø1" SCH80	LIC (K3)
39	FLANGE	1	SA105	5.90		FLANGE 1"#300 W.N - RF	LIC (K3)
40	PIPE	1	SA106 Gr. B	2.18		CAÑ. Ø1 1/2" SCH80	TI (K4)
41	FLANGE	1	SA105	3.30		FLANGE 1 1/2"#300 W.N - RF	TI (K4)
42	PIPE	1	SA106 Gr. B	1.08		CAÑ. Ø1" SCH160	LSAZ (K2a)
43	FLANGE	1	SA105	1.80		FLANGE 1"#300 W.N - RF	LSAZ (K2a)
44	PIPE	1	SA106 Gr. B	1.08		CAÑ. Ø1" SCH160	LSAZ (K2b)
44	FLANGE	1	SA105	1.80		FLANGE 1"#300 W.N - RF	LSAZ (K2b)
46	PIPE	1	SA106 Gr. B	1.08		CAÑ. Ø1" SCH160	LSAZ (K2c)
47	FLANGE	1	SA105	1.80		FLANGE 1"#300 W.N - RF	LSAZ (K2c)
48	PIPE	1	SA106 Gr. B	1.08		CAÑ. Ø1" SCH160	LSAZ (K2d)
49	FLANGE	1	SA105	1.80		FLANGE 1"#300 W.N - RF	LSAZ (K2d)
50	PIPE	1	SA106 Gr. B	1.08		CAÑ. Ø1" SCH160	LSAZ (K2f)
51	FLANGE	1	SA105	1.80		FLANGE 1"#300 W.N - RF	LSAZ (K2f)
52	PIPE	1	SA106 Gr. B	1.08		CAÑ. Ø1" SCH160	LSAZ (K2e)
53	FLANGE	1	SA105	1.80		FLANGE 1"#300 W.N - RF	LSAZ (K2e)
52	PIPE	1	SA106 Gr. B	2.18		CAÑ. Ø1 1/2" SCH80	NOZZLE 9
53	FLANGE	1	SA105	2.60		FLANGE 1 1/2"#300 S.O - RF	NOZZLE 9

MAIN DIMENSIONS / DESIGN CONDITIONS

MAIN DIMENSIONS		DESIGN CONDITIONS	
NOMINAL VOLUME (m^3)	121	SEISMIC ZONING	[illegible]
INTERNAL DIAMETER (D) (mm)	4600	FLUID	CONDENSATE
HEIGHT WALL (H) (mm)	8200	DENSITY (Kg/m^3)	1000
WIDTH (mm)	-	BOIDED (%)	--------
LENGTH (mm)	-	PH VALUE	6 - 8.5
		OPERATION HEAT °C	0 - 38

ITEM Nº		TICKNESS		
			DESIGN HEAT °C	60
1	BURR 1	6	WORK PRESSURE (BAR)	ATMOSPHERIC
2	BURR 2	5	DESIGN PRESURE (BAR)	ATMOSPHERIC
3	BURR 3	5	DESIGN REPORT	YES
4	BURR 4	5		
5	TOP RING L100x10	L100x100x10		
6	BOTTOM RING	8		
7	BOTTOM	8		
8	CONIC ROOF AUTOSUPPORTED	6		

NOZZLES LIST FOR CONDENSATE TANK

NOZZLE	SIZE Ø	FLANGE TYPE	RATING	ELEVATION (mm)	PROJECTION (mm)	SERVICE
N1	6"	S.O. - RF	150#	S 300	2535	OUTLET (PUMP SUCTION)
N2	6"	S.O. - RF	150#	S 5900	2535	CONDENSATE INLET
N3	4"	S.O. - RF	150#	B -490	2500	DRAIN
N4	4"	S.O. - RF	150#	S 5900	2535	DEMI WATER INLET
N5	4"	S.O. - RF	150#	R 8900		TO CO2 ABSORVER
N6	4"	S.O. - RF	150#	S 5800	2535	OVERFLOW
N7	4"	S.O. - RF	150#	R 8900		CHECK VALVE AND RUPTURE DISK
N8	4"	S.O. - RF	150#	R 8900		WITH BLIND FLANGE
K1a	4"	S.O. - RF	150#	S 300	2535	LI CONNECTION
K1b	4"	S.O. - RF	150#	S 300	2535	LI CONNECTION
N9	1 1/2"	S.O. - RF	300#	S 5900		CONDENSATE FROM DEMI PLANT
K3	1"	W.N. - RF	300#	S 300	2485	LI CONNECTION
K4	1 1/2"	W.N. - RF	300#	S 500	2535	TI CONNECTION
K2a/c/e	1"	W.N. - RF	300#	S 286	2535	LSAZ CONNECTION
K2b/d/f	1"	W.N. - RF	300#	S 642	2535	LSAZ CONNECTION
M1	24"		AP1 650	S 900	2530	MANHOLE
M2	24"		AP1 650	R	8785	MANHOLE

S= SHELL R= ROOF B= BOTTOM

ASSEMBLY		TESTING	
DESIGN STANDAR	API AND 2007-NCH 2369-2003	MEASURE	SI (REF. API 650)
TANK MATERIAL	A36	RADIOGRAPHY INSPECTION	SI (REF. API 650)
FLANGES GRADE	ASME B16.5	INK BORE	SI (REF. API 650)
CORROSION OVERTICKNESS (mm)	1.2 mm	HIDRAULICS TEST	SI (REF. API 650)
SUPERIOR RAILING OF TKS	YES	EMPTY FLOOR	
REVESTIMIENTO INTERIOR	NOT		
SERVICE STAIR	YES		

ANCHOR		SURFACE TREATMENT
ANCHOR QUANTITY	20	ACCORDING TO PAINTING SPECIFICATION
BOLT DIAMETER	Ø28mm	
QUANTITY OF SHEAR CHAIR	8	
BOLTS DIAMETER CIRCLE	4.921 mm	ENVIRONMENT TYPE

FOUNDATION LOADING DATA

DEAD LOAD PER UNIT LENGTH	D_L	3.97 KN-m
LIVE LOAD PER UNIT LENGTH	L_L	1.13 KN/m
UNIFORM LOADING, OPERATING CONDITION	W_0	87.37 KN/m²
UNIFORM LOADING, HIDROSTATIC TEST CONDITION	W_h	87.37 KN/m²
BASE SHEAR DUE TO WIND LOAD	F_w	28.88 KN
MOMENT DUE TO WIND LOAD	M_w	105.41 KN-m
BASE SHEAR DUE TO SEISMIC LOAD	F_s	602.30 KN
MOMENT DUE TO SEISMIC LOAD	M_s	2,117.07 KN-m

LOADS AT BASE		OPERATING	HYDROTEST	EARTHQUAKE
VERTICAL LOAD	KN	1292.67	1292.67	1292.67
SHEAR	KN			602.30
MOMENT	KN-M			2117.07
SUPPLY WEIGHT (MASS)		6.53 Tons		
WEIGHT FULL WATER		127.53 Tons		

GENERAL NOTES

- FOR MANHOLE SHELL DETAIL SEE DRAWING 04-0022-ST-01
- FOR MANHOLE ROOF DETAIL SEE DRAWING 04-0022-ST-02
- FOR RAILING DETAIL SEE DRAWING 04-0022-ST-04
- FOR NOZZLE DETAIL SEE DRAWING 04-0022-ST-05
- FOR LADDER DETAIL SEE DRAWING 04-0022-ST-03

REV.	REVISION DESCRIPTION AND REFERENCE	ISSUE CAT.	DATE
07			
06	APPROVAL		26/06/09
05	APPROVAL		16/06/09
04	APPROVAL		06/05/09
03	APPROVAL		19/03/09
02	APPROVAL		27/02/09
01	NEW FORMAT		29/12/08
00	APPROVAL		DIC. 2008

CONDENSATE ENDESA TANK

AMSU — DEPARTAMENTO DE DETALLAMIENTO

DRAWN BY	O. GUTIERREZ	SEPT. 2008
CHECKED BY	O. GUTIERREZ	SEPT. 2008
AUTHORIZED	O. GUTIERREZ	SEPT. 2008

OT-04-0022-DE-03 — ISSUE CAT.: C

REV.	REVISION DESCRIPTION AND REFERENCE	ISSUE CAT.	DATE
01	ISSUED FOR CONSTRUCTION	C	29/06/2009
00	APPROVAL	A.	DIC. 2008

	DATE	UNIT	INITIAL/NAME	SIGNATURE
PREPARED	29/06/2009	–	AM	
CHECKED	29/06/2009	L-340	CMS	
AUTHORIZED	29/06/2009	L-399	ZAB	

[FILE DOCUMENT: EAA001_AA_000_000_000000_00A.DWG]

REPLACES DOCUMENT:

MEASURE UNIT mm — SCALE 1:SCALA — PLOT SCALE 1:1

endesa chile

ENDESA CHILE

ACB - 003.06

BOCAMINA II PROJECT

Tecnimont — SLOVENSKE ENERGETICKE STROJARNE a.s. TLMACE

CONDENSATE WATER STORAGE TANK GA AND DETAIL DRAWING

ITEM NO-20LCA13-BB001

DWG IDENTIFIC. NUMBER:	EAD000-F3-(LCA)000-AM0101	01	1	1
WORK id / SERIES / KKS id / KEY PLAN / PROGRESSIVE NUMB.		REV.	SHEET	OF